LABEL	TEXT
1	DUCTED FAN (EC 0-10V CONTROL)
2	KALORI FAN (Max 3A)
3	COOLANT VALVE
4	EBERSPACHER LOOM

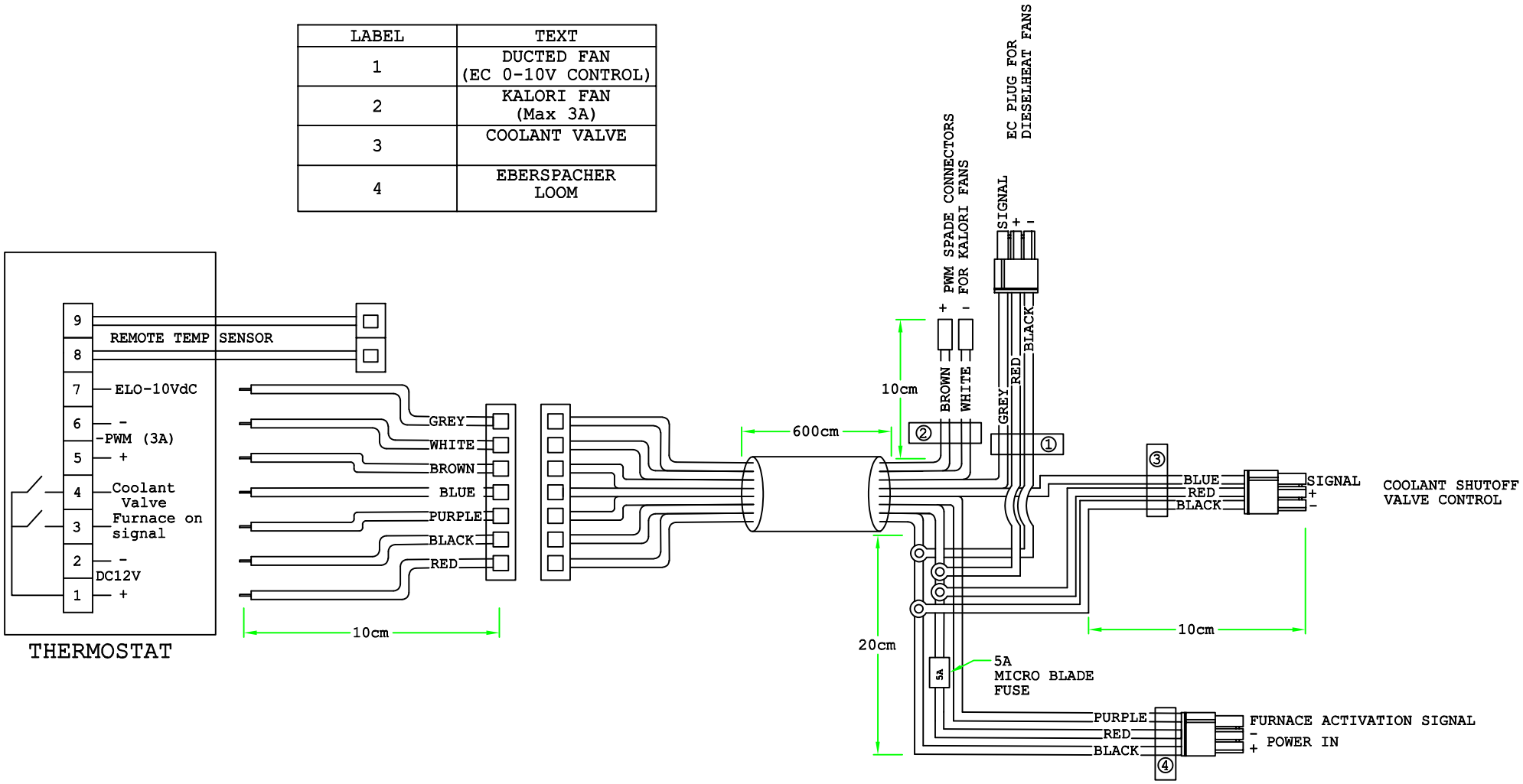

COOLANT VALVE WIRING MOLEX MICRO FIT

043645-0300 | 043640-0300

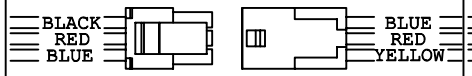

THERMOSTAT — COOLANT VALVE

43030 F CRIMP TERMINALS — 43031 M CRIMP TERMINALS

FAN MOTOR WIRING MOLEX MICRO FIT

043645-0300 | 043640-0300

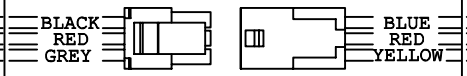

THERMOSTAT — FAN MOTOR

43030 F CRIMP TERMINALS — 43031 M CRIMP TERMINALS

EBERSPACHER FURNACE CONNECTION MOLEX MICRO FIT JR

39-01-4032 | 39-01-4030

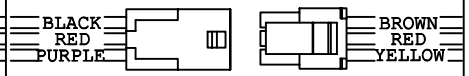

THERMOSTAT 5558 m — EBERSPACHER D5E LOOM

CRIMP TERMINALS

dieselheat

TITLE: THERMOSTAT LOOM V2

MATERIAL:

Part Name:

REVISION 11

Drawn By: CARLO ADRAINCEM

SCALE: NTS

SHEET 1 OF 1